32433000

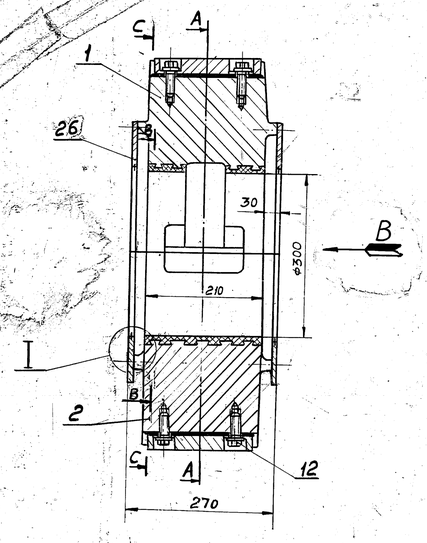

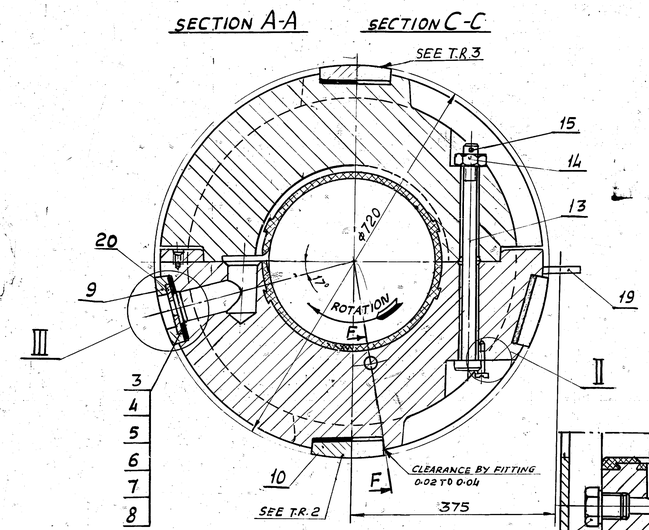

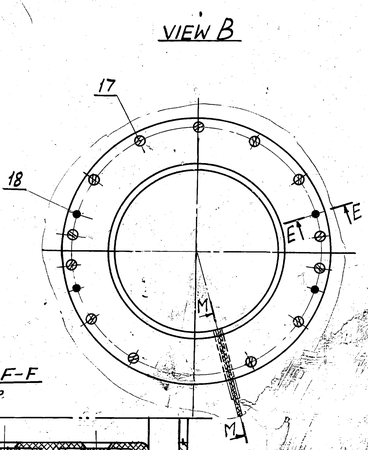

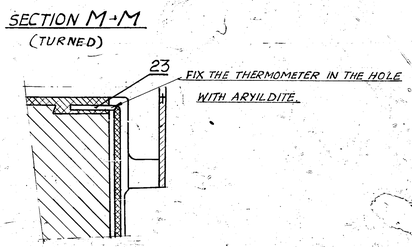

TECH. REQ.T.

(01) 10. a) ITEM Nos. 2, 23 OF SPECIAL PIPE JOINT DRG. No: 32431010 WILL BE DESPATCHED WITH THE JACKING OIL PIPE LINE DRG. No: 32436000.

b). OPENING & THREADS OF ITEM No. 1 OF DRG. No: 32431010 ARE TO BE PROTECTED BY ADHESIVE TAPE BEFORE DESPATCH.

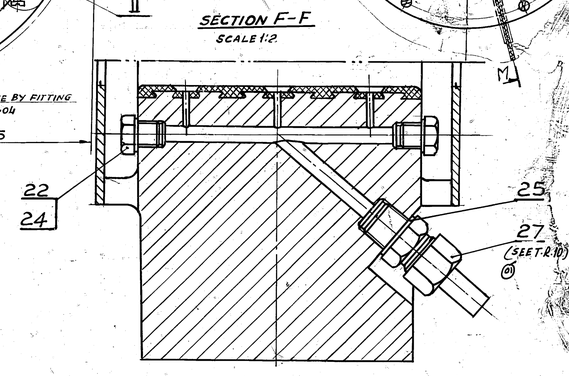

DETAIL OF FITTING OF BEARING WITH SHAFT

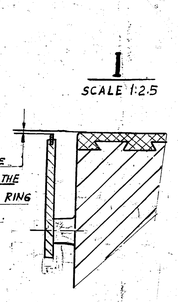

DIMENSION 0·0-0·02 TO BE OBTAINED WHILE MOUNTING THE LOWER HALF OF OIL GUARD RING SIDE CLEARANCES ARE EQUAL.

SECTION B-B

SCALE 1:2.5

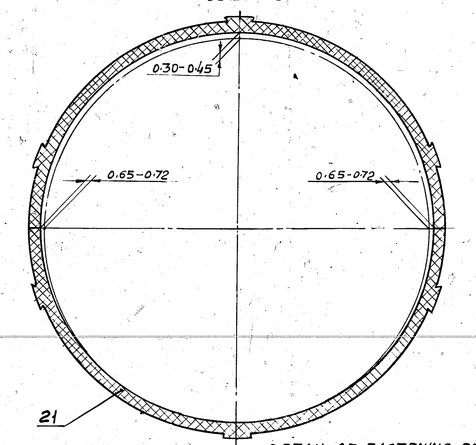

DETAIL OF FASTENING OF ORIFICE PLATE

DETAIL OF MOUNTING OF OIL GUARD RINGS ON LOCATING PINS

SECTION E-E

SCALE 1:1

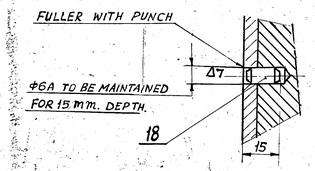

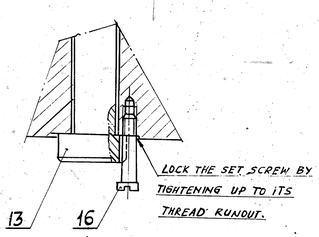

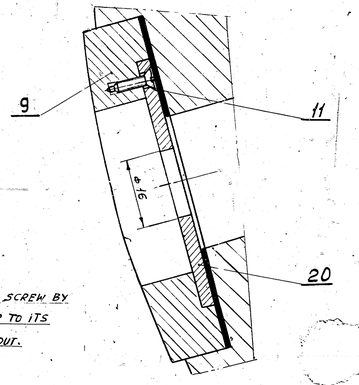

TECH. REQUIREMENTS:-

1. MORE THAN THREE SHIMS ARE NOT ALLOWED UNDER ANY ADJUSTING PAD FOR THE ALIGNMENT OF THE BEARING AT THE PLANT TEST BED. THE SAME ARE SENT FOR ERECTION AT THE POWER STATION WHERE DISMANTLING OF ADJUSTING PADS & CHANGE OF SHIMS ARE NOT ALLOWED BEFORE CHECK UP OF ALIGNMENT.
2. LAPPING OF ADJUSTING PADS TO THE BORE (IN THE PEDESTAL) FOR BEARING TO BE CHECKED WITH COLOUR (CONTACT SURFACE NOT LESS THAN 80%) AFTER FITTING THE PADS INTO SEATS FOR BEARING AND BEFORE PLACING THE ROTOR, CHANGE THE SHIMS ONLY UNDER THE LOWER PAD TO ENSURE A CLEARANCE OF 0·05 TO 0·07.
3. ENSURE AN INTERFERENCE OF THE ORDER OF 0·15 TO 0·25 mm BETWEEN UPPER PAD AND PEDESTAL COVER DURING ASSEMBLY OF TURBINE.
4. FOR MACHINING ϕ720 PLACE SHIMS OF 1 mm THICKNESS UNDER EVERY ADJUSTING PAD OTHER SHIMS OF THICKNESS 0·5, 0·3, 0·2, 0·15 & 0·1 ARE MEANT FOR CENTERING.
5. PADS & SHIMS ARE NOT REMOVED FROM THE BEARING FOR PACKING AND DESPATCH.
6. AFTER TESTING OF TURBINE AT THE PLANT TEST-BED SCRAPPING OF BABBIT IS ALLOWED ONLY IN ACCORDANCE WITH THE PERMISSION CARD OF STD. ALIGNMENT IS TO BE CHECKED SECOND TIME AT THE TEST-BED INCASE SCRAPPING IS EXCESSIVE.
7. THE HOLES FOR LOCATING PINS (ITEM 18) ARE TO BE DRILLED TOGETHER WITH OIL GUARD RINGS (ITEM 28)
8. PAINTING AND CONSERVATION OF THE BEARING IS AS PER INSTRUCTIONS 0446.001.
   PAINTING SURFACE AREA - 1.7 m^2.
   CONSERVATION SURFACE AREA - 0.4 m^2.
9. AFTER BABBITING, DYE PENETRANT TEST TO BE CARRIED OUT AT THE ENDS TO ENSURE PROPER BONDING OF THE BABBIT METAL.

(04) (5) NOTE :- ITEM NO. 28 TO BE USED IN PLACE OF ITEM NO. 23 FOR ALL SETS AFTER SET NO. 49 i.e. METTUR II OWN WARDS. FOR SET NO. 49 AND EARLIER SETS ITEM NO. 23 HOLDS GOOD.

NOTE FOR SPARE:- FOR SPARE BEARING INNER DIAMETER ϕ300 (AS PER JOURNAL DIA) AND ϕ720 (AS PER LOG SHEET) SHOULD HAVE 2 MM ALLOWANCE IN EACH CASE.

ZONE	ITEM NO.	DESIGNATION	DESCRIPTION	QTY	WT. PER PC.	TOTAL WT. IN Kg.	MATERIAL	REMARKS.
B1	28	AA 7322622	PRTD CYL D4 L25 DUPLEX 2000	1	0·30	0·60	TYPE PRT 03 AA 7322622	
B2	27	32431010 ~~13-5454-015~~	SPECIAL PIPE JOINT ~~DWG 15~~	1	0·44 ~~0·4~~	0·44 ~~0·4~~	—	(01) SEE T.R.10 SUB-ASSY.
B4	26	32423010	OIL GUARD RING (IN TWO HALVES)	2	5·18 ~~3·25~~	10·33 ~~6·52~~	—	SUB-ASSY.
B2	25	17·8370·015	SEALING RING d=28	1	0·009	0·009	COPPER FRTP-2 0502·007	
B2	24	17·8370·012	SEALING RING d=18	2	0·005	0·01	COPPER FRTP-2 0502·007	
B1	23	—	COPPER RESISTANCE THERMOMETER TYPE CRT-03 L=1000 (01) L=1600	1	0·03	0·06 ~~0·03~~	TYPE CRT-03 PS·0563·001	
B2, B3	22	71·8322·011	PLUG 3/8" PIPE	2	0·063	0·126	STEEL C20 AA: 10108	
A3	21	—	BABBIT	—	—	100	BABBIT 86 IS: 25 61	
A2, B3	20	32405002	ORIFICE PLATE ϕ16	1	0·26	0·26	STEEL C20 AA: 10108	
B2	19	32425014	STOP WASHER	1	0·625	0·625	STEEL 25X1M GOST 10506-63 TT-K170-M173-65	
A4, B2	18	51·8935·154	CYLINDRICAL PIN 6n6 X 14 IS: 2393-63	8	0·003	0·024	STEEL C40 AA: 10208	
B2	17	21·8904·128	SCREW M8X15 IS: 1365-62	26	0·007	0·182	STEEL 4S PS: 0616·010	
A3	16.	32425013	SCREW SPECIAL	4	0·046	0·184	STEEL C40 AA: 10208	
B2	15	11·8994·189	SPLIT COTTER PIN 6·3X63 IS: 549-61	4	0·019	0·076	MILD STEEL	
B2	14	23·8940·017	NUT M30 IS: 1364-60	4	0·22	0·88	STEEL 5D PS: 0616·010	
A3, B2	13.	32424002	SPECIAL BOLT M30X390	4	2·42	9·69	STEEL C40 AA: 10208	
B3	12.	32425011	BOLT M16X35	8	0·109	0·872	STEEL C40 AA: 10208	
A2	11	21·8904·079	SCREW M5X12 IS: 1366-62	1	0·002	0·002	STEEL 4S PS: 0616·010	
B3	10.	32425009	ADJUSTING PAD	3	5·5	16·5	STEEL SE·42-S AA: 10108	
A3, B3	9	32425008	ADJUSTING PAD WITH HOLE	1	4·74	4·74	STEEL SE·42-S AA: 10108	
B3	8.	32425007	SHIM THICK S=1.0 mm	4	0·164	0·656	STEEL 30 Cr 13 IS: 1570-61	
B3	7.	32425006	SHIM THICK S=0·5 mm	2	0·082	0·164	STEEL 22 Cr 13 IS: 1570-61	
B3	6.	32425005	SHIM THICK S=0·3 mm	2	0·049	0·098	STEEL 22 Cr 13 IS: 1570-61	
B3	5.	32425004	SHIM THICK S=0·2 mm	2	0·033	0·066	STEEL 22 Cr 13 IS: 1570-61	
B3	4.	32425003	SHIM THICK S=0·15 mm	2	0·024	0·048	STEEL 22 Cr 13 IS: 1570-61	
B3	3.	32425002	SHIM THICK S=0·1 mm	2	0·016	0·032	STEEL 22 Cr 13 IS: 1570-61	
B4	2	32433001	HOUSING FOR BEARING ϕ300 (LOWER HALF)	1	216	216	CSM-C25; 152856-64 II-0500·401	
B4	1	32433001	HOUSING FOR BEARING ϕ300 (UPPER HALF)	1	190	190	CSM-C25; 152856-64 II-0500·401	

ZONE	CHG. NOS	DOCU. NO.	SIGN	DATE
	01	3	STE-86-02	16-02-86
	CHG. No.	DOCU. No.	SIGN	DATE

WORKED	M. TIWARY		26.12.77
CHECKED	UPADHYAY		15-2-77
SUPERVISED			
TECH. CONT	A. S. PAIK		27.2.77
STD. CONT.			
APPROVED	D. S. U.		25-8-86

C-200-130

32433000 SP

JOURNAL BEARING ϕ300 (FRONT BEARING OF HPC)

32433000

LETTER	WEIGHT	SCALE
- B	45·7 kg 100·78 lb	1:5

SHEET-1 TOTAL SHEET-1

HEEP STD

SIZE 24

M F

SIGN AND DATE | SUPERSEDES INVENTORY No. | REPLICATE INVENTORY No. | REV. & DATE | INVENTORY No. S1-102 72